SECTION VIEW

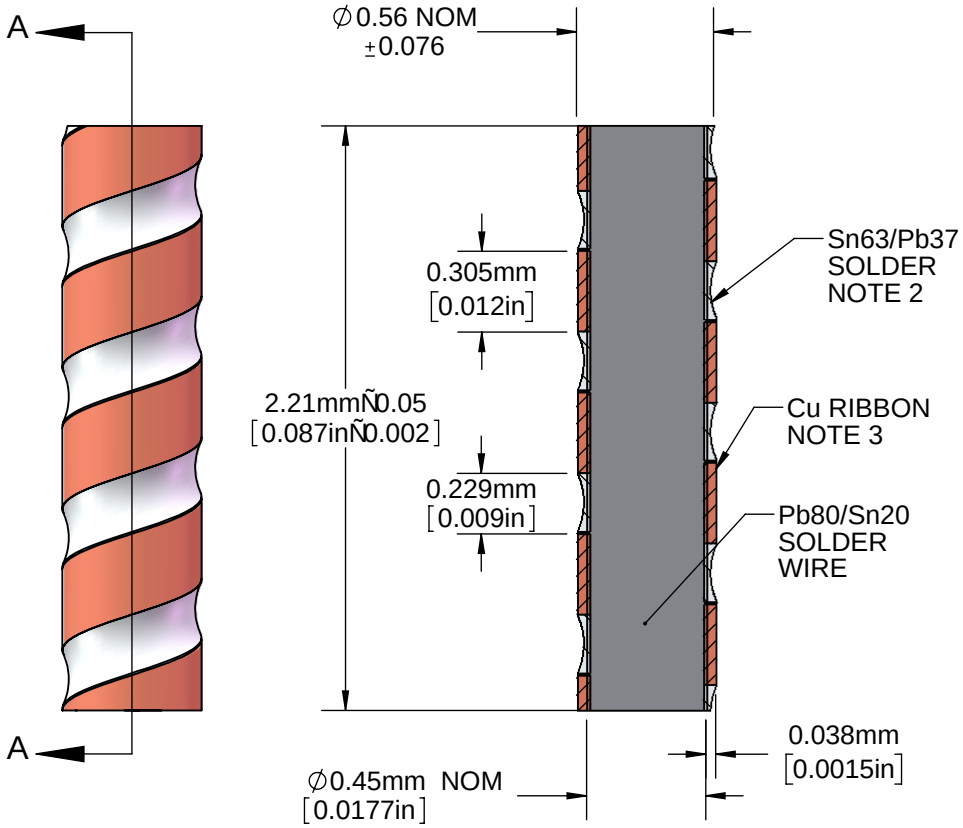

TOP VIEW

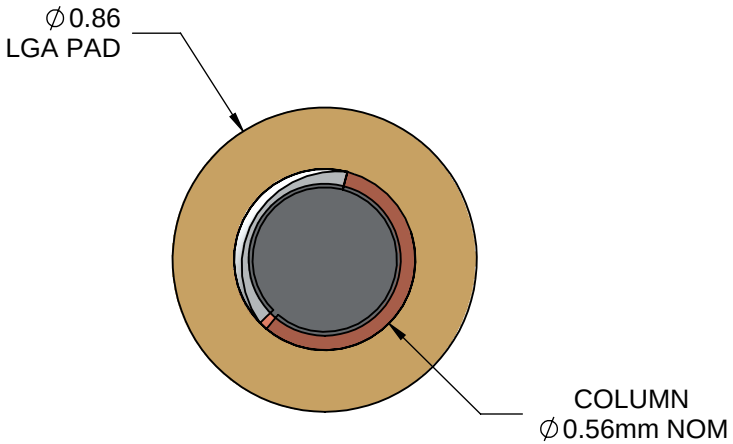

LGA - LAND GRID ARRAY
PAD PLATING Ni-Au

NOTES: (Unless Otherwise Specified).

1) DIMENSIONS mm [INCHES].

2) THICKNESS Sn63/Pb37 SOLDER COAT 6~25um [0.25~1.0mil].

3) Cu ALLOY C10100 - OFE (CDA-101). 99.99% PURE.

APPROVALS		DATE	TopLine®			
DRAWN	T.Au	4/18/2018				
ENG	M. Hart	4/18/2018	TITLE	CG8020C22X87 CCGA SOLDER COLUMN		
MFG						
QA			SCALE	SIZE	DRAWING NO.	REV
CUST			35:1	A	802287	B
REVISED			DO NOT SCALE DRAWING			SHEET 1 OF 1